KURZWEIL

MP15

USER'S MANUAL

English Manual

HDC YOUNG CHANG MUSIC

KURZWEIL

IMPORTANT SAFETY INSTRUCTIONS

1. Read these instructions.
2. Keep these instructions.
3. Heed all warnings.
4. Follow all instructions.
5. Do not use this apparatus near water.
6. Clean only with dry cloth.
7. Do not block any of the ventilation openings. Install in accordance with the manufacturer's instructions.
8. Do not install near any heat sources such as radiators, heat registers, stoves, or other apparatus (including amplifiers) that produce heat.
9. Do not defeat the safety purpose of the polarized or grounding-type plug. A polarized plug has two blades with one wider than the other. A grounding type plug has two blades and a third grounding prong. The wide blade or the third prong are provided for your safety. If the provided plug does not fit into your outlet, consult an electrician for replacement of the obsolete outlet.
10. Protect the power cord from being walked on or pinched, particularly at plugs, convenience receptacles, and the point where they exit from the apparatus.

11. Only use attachments / accessories specified by the manufacturer.
12. Use only with a cart, stand, tripod, bracket, or table specified by the manufacturer, or sold with the apparatus. When a cart is used, use caution when moving the cart / apparatus combination to avoid injury from tip-over.
13. Unplug this apparatus during lightning storms or when unused for long periods of time.
14. Refer all servicing to qualified service personnel. Servicing is required when the apparatus has been damaged in any way, such as power-supply cord or plug is damaged, liquid has been spilled or objects have fallen into the apparatus, the apparatus has been exposed to rain or moisture, does not operate normally, or has been dropped.
15. Allow adequate ventilation for the power adapter. Do not hide it under a carpet or behind a curtain or place it in an enclosed space where heat buildup can occur.

WARNING : To reduce the risk of fire or electric shock, do not expose this apparatus to rain or moisture. Do not expose this equipment to dripping or splashing and ensure that no objects filled with liquids, such as vases, are placed on the equipment.
To completely disconnect this equipment from the AC Mains, disconnect the power supply cord plug from the AC receptacle.

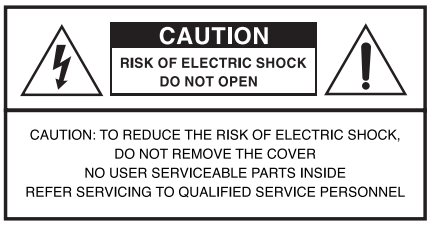

The lightning flash with the arrowhead symbol, within an equilateral triangle, is intended to alert the user to the presence of uninsulated ìdangerous voltageî within the productís enclosure that may be of sufficient magnitude to constitute a risk of electric shock to persons.

The exclamation point within an equilateral triangle is intended to alert the user to the presence of important operating and maintenance (servicing) instructions in the literature accompanying the product.

IMPORTANT SAFETY & INSTALLATION INSTRUCTIONS

INSTRUCTIONS PERTAINING TO THE RISK OF FIRE, ELECTRIC SHOCK, OR INJURY TO PERSONS

WARNING : *When using electric products, basic precautions should always be followed, including the following:*

1. Read all of the Safety and Installation Instructions and Explanation of Graphic Symbols before using the product.
2. Do not use this product near water-for example, near a bathtub, washbowl, kitchen sink, in a wet basement, or near a swimming pool, or the like.
3. This product should only be used with a stand or cart that is recommended by the manufacturer.
4. This product, either alone or in combination with an amplifier and speakers or headphones, may be capable of producing sound levels that could cause permanent hearing loss. Do not operate for a long priod of time at a high volume level or at a level that is uncomfortable. If you experience any hearing loss or ringing in the ears, you should consult an audiologist.
5. The product should be located so that its location or position does not interfere with its proper ventilation.
6. This product should be located away from heat sources such as radiators, heat registers, or other products that produce heat.
7. This product should be connected to a power supply only of the type described in the operating instructions or as marked on the product.
8. This product may be equipped with a polarized line plug (one blade wider than be other). This is a safety feature. If you are unable to insert the pluginto the outlet, contact an electrician to replace your obsolete outlet. Do not defeat the safety purpose of the plug.
9. The power supply cord of the product should be unplugged from the outlet when left unused for a long period of time. When unplugging the power supply cord, do not pull on the cord, but grasp it by the plug.
10. Care should be taken so that objects do not fall and liquids are not spilled into the enclosure through openings.
11. The product should be serviced by qualified service personnel when:
    A. The power supply cord or the plug has been damaged;
    B. Objects have fallen, or liquid has been spilled into the product;
    C. The product has been exposed to rain;
    D. The product does not appear to be operating normally or exhibits a marked change in performance;
    E. The product has been dropped, or the enclosure damaged.
12. Do not attempt to service the product beyond that described in the user maintenance instructions. All other servicing should be referred to qualified service personnel.
13. ***WARNING :*** Do not place objects on the product's power supply cord, or place the product in a position where anyone could trip over, walk on, or roll anything over cords of any type. Do not allow the product to rest on or be installed over cords of any type. Improper installations of this type create the possibility of a fire hazard and/or personal injury.

RADIO AND TELEVISION INTERFERENCE

WARNING : Changes or modifications to this instrument not expressly approved by KURZWEIL could void your authority to operate the instrument.

IMPORTANT : When connecting this product to accessories and/or other equipment use only high quality shielded cables.

NOTE : This instrument has been tested and found to comply with the limits for a Class B digital device, pursuant to Part 15 of the FCC Rules. These limits are designed to provide reasonable protection against harmful interference in a residential installation. This instrument generates, uses, and can radiate radio frequency energy and, if not installed and used in accordance with the instructions, may cause harmful interference to radio communications. However, there is no guarantee that interference will not occur in a particular installation. If this instrument does cause harmful interference to radio or television reception, which can be determined by turning the instrument off and on, the user is encouraged to try to correct the interference by one or more of the following measures:
The normal function of product may be disturbed by strong electro magnetic interference. If so, simply reset the product to resume normal operation by following the instruction manual.
In case the function could not resume, please use the product in other location.

- Reorient or relocate the receiving antenna.
- Increase the separation between the instrument and the receiver.
- Connect the instrument into an outlet on a circuit other than the one to which the receiver is connected.
- If necessary consult your dealer or an experienced radio/television technician for additional suggestions.

NOTICE : This apparatus does not exceed the Class B limits for radio noise emissions from digital apparatus set out in the Radio Interference Regulations of the Canadian Department of Communications.

AVIS : Le present appareil numerique n'semet pas de bruits radioelectriques depassant les limites applicables aux appareils numeriques de la class B prescrites dans le Reglement sur le brouillage radioelectrique edicte par le ministere des Communications du Canada.

SAVE THESE INSTRUCTIONS

Contents

Table of Contents

Chapter 1 Front Panel 6

Main Buttons 6

Chapter 2 Main Features 7

Main Features 7

Chapter 3 Piano Assembly 8

1. Piano Assembly 8
2. Applying Power 11
3. Setting the Volume 11

Chapter 4 Selecting Sounds 12

1. Selecting Sounds 12
2. Piano Lock 12

Chapter 5 Layering 14

1. Layering Two Sounds 14
2. Layer Functions 14

Chapter 6 Splitting 15

1. Splitting the Keyboard 15
2. Split Functions 15

Chapter 7 Rhythm 16

1. Selecting a Rhythm 16
2. Rhythm Functions 16

Chapter 8 Functions 17

1. Function Mode 17
2. Selecting a Function 17

Chapter 9 Recording 24

Recording a Performance 24

Chapter 10 Demo Songs 25

Listening to Demo Songs 25

Chapter 11 Pedals 26

1. Pedals 26
2. Using the Pedals 26

Chapter 12 MIDI 27

1. MIDI Channel 27
2. Connecting MIDI 27

Chapter 13 Connection 30

1. Using Headphones 30
2. Aux In 30
3. Aux Out 30
4. MP3 Aux In 30

Chapter 14 Sound List 31

Chapter 15 Setup & Rhythm List 32

Chapter 16 Demo Song List 33

Chapter 17 Specifications 34

Chapter 1 Front Panel

Main Buttons

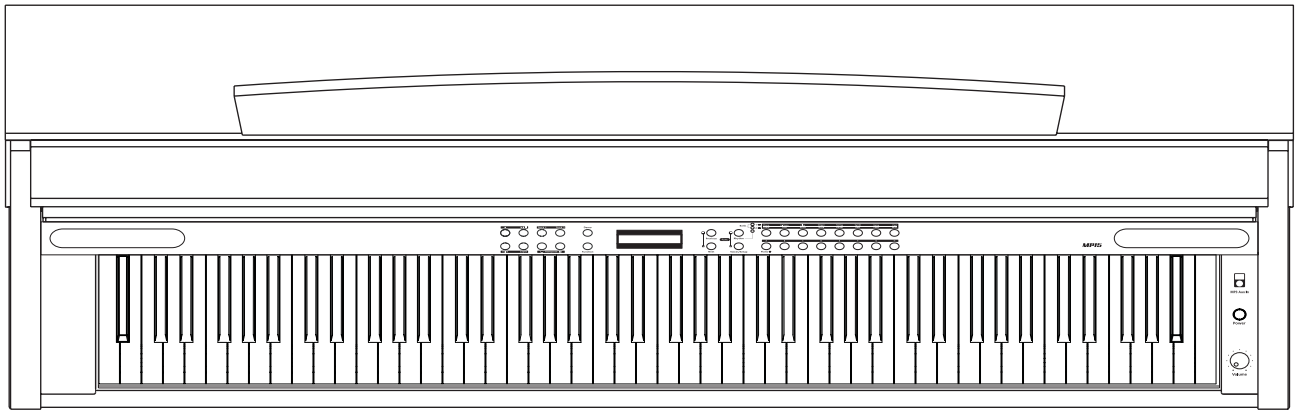

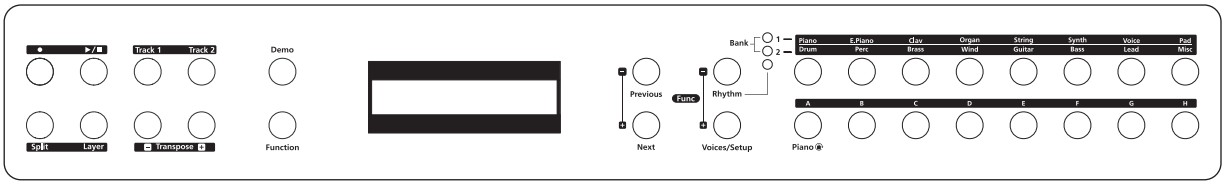

(1) Voice selection buttons
Select among the 128 Voices and 64 Setups with the [Voices/Setup] button. Select Banks, Groups, and individual sounds with the 16 Sound Select buttons.

(2) Rhythm button
Select among the 60 rhythms with the [Rhythm] button. Select groups and individual rhythms with the 16 Sound Select buttons.

(3) Layer button
You can layer two voices and play them simultaneously to create a thicker and richer sound.

(4) Split button
For playing different voices on the left-hand and right-hand section of the keyboard.

(5) Demo songs
Select among the 50 demonstration songs.

(6) Function button
You may set functions like Tune, Rhythm Tempo, Metronome, Tempo, etc.

(7) Record button
For recording your keyboard performance.

(8) Play/Stop button
These control playback of or stop the demonstration songs and your recorded songs.

(9) Transpose buttons
You can shift the pitch of the entire keyboard up or down so that the pitch will match that of the another instrument or singer.

Chapter 2 Main Features

Thank you for purchasing the KURZWEIL's Digital Piano. We recommend that you read this manual carefully so that you can fully take advantage of the advanced and convenient functions of the KURZWEIL's Digital Piano.

Main Features

- 88 note fully weighted hammer action keyboard
- 3 Pedals (Sustain, Sostenuto, Soft)
- 10 Touch sensitivity settings
- Stereo Audio Input, Output
- 2 Headphone jacks
- Standard MIDI In, Out
- USB MIDI
- 1 Line 16 Character LCD
- 128 Voices + 64 Setups
- 60 Rhythm patterns
- Transpose, Tune functions
- Layer, Split mode
- Recording function
- Front panel MP3 Aux In

Chapter 3 Piano Assembly

Check that all of the following items are present.

Part Name	Q'ty	Part Name	Q'ty
①Keyboard	1 EA	⑥ Screws for side panel and keyboard	4 EA
②Side panel of stand (Left)	1 EA	⑦ Screws for side panel and pedal box	4 EA
③Side panel of stand (Right)	1 EA	⑧ Screws for side panel and rear panel	4 EA
④Pedal box	1 EA	⑨ Screws for rear panel	4 EA
⑤Rear panel	1 EA	⑩ Cord holder	2 EA
		⑪ Screws for keyboard	2 EA

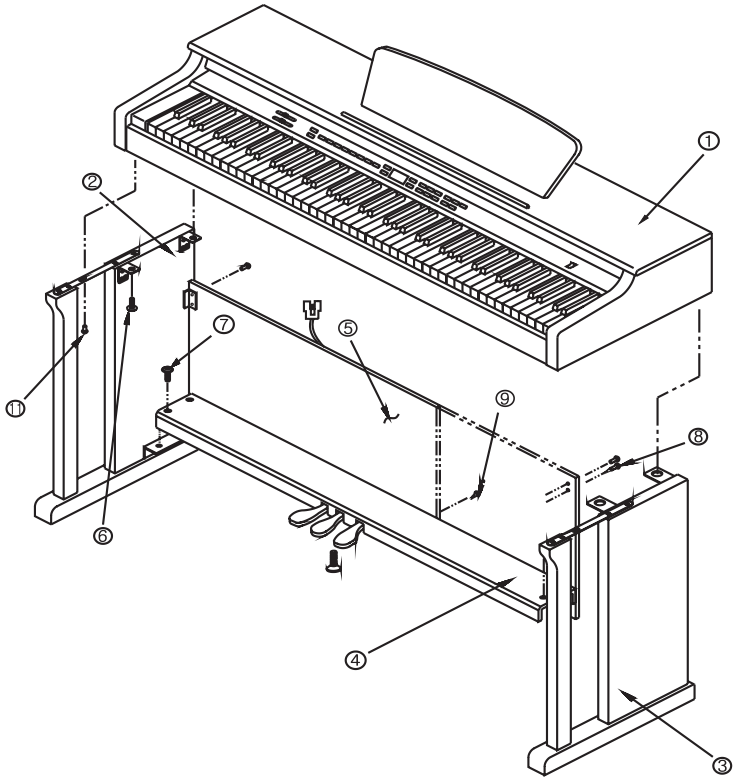

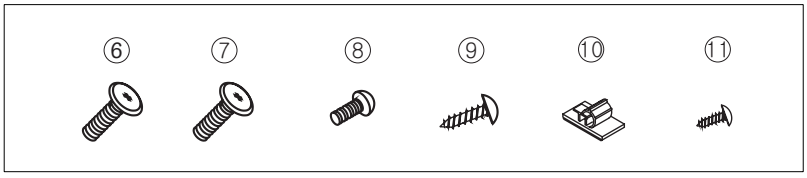

Please check the quantity of related part number.

Chapter 3 Piano Assembly

1. Stand Assembly

- Assembly should be carried out by at least two persons.
- Assemble the stand on a hard and flat floor with ample space.
- Be sure to use the included screws, and insert screws of the correct size in the correct hole locations. Use of incorrect screws can damage the product.

1) Side panel and Pedal box assembly

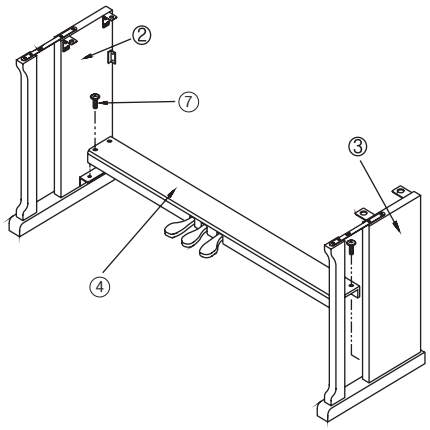

1. Place the pedal box ④ on the left side panel ② and use ⑦ screws to fasten the side panel.
2. Place the pedal box ④ on the right side panel ③ and use ⑦ screws to fasten the side panel.
3. You can find the pedal cable in the pedal box ④. Untie and straighten out the bundled pedal cable.

2) Rear panel assembly

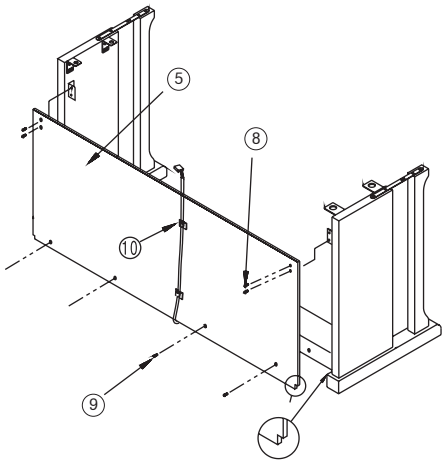

1. Fit into the rear panel's hole in the side panel brackets and then use the screws ⑧ to fasten the rear panel.
2. Use the screws ⑨ to fasten the bottom of the rear panel.

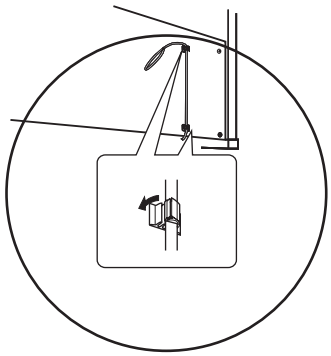

Attach the pedal cord holders to the rear panel as shown, then clip the cord into the holders

3) Mounting the keybaord

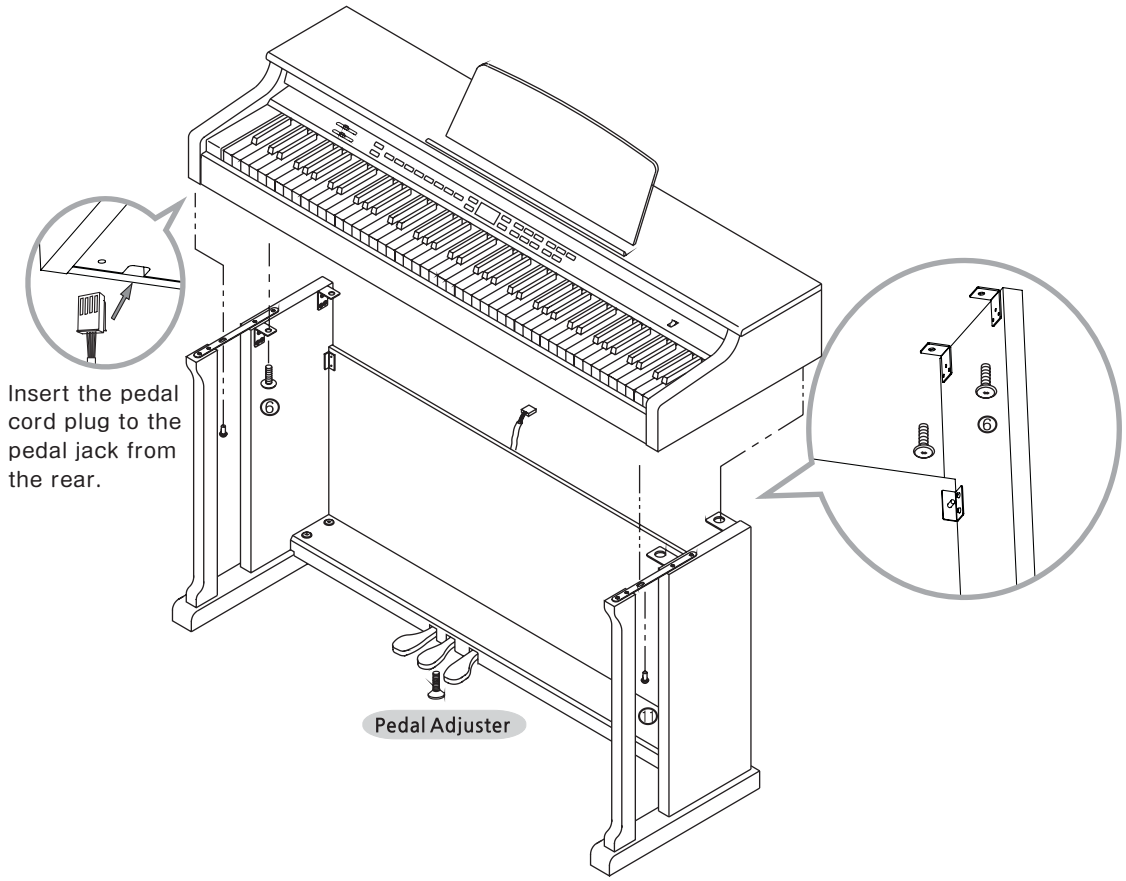

1. Place the keyboard on the stand and fit into the holes in the side panel brackets.
2. Fasten the keyboard to the side panel using screws ⑥.
3. Fasten the keyboard to the front legs using screws ⑪.
4. Insert the pedal cable plug into the pedal jack located on the bottom of the keyboard.

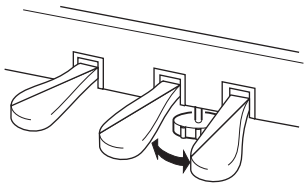

5. Rotate the pedal adjuster until it comes in firm contact with the floor surface. If the adjuster is not in firm contact with the floor, the pedals will wobble and may malfunction.

2. Applying Power

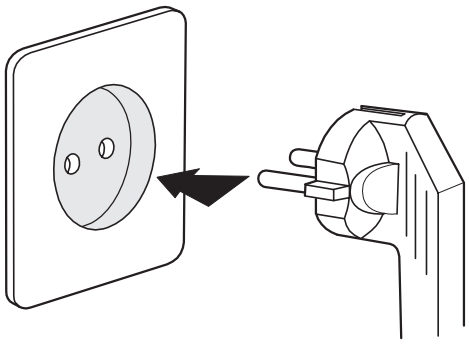

1) Connecting the power code

First insert the plug of the AC power cord into the AC connector on the Adaptor, then plug the other end of the cord into the proper AC outlet on the wall. In some areas a plug adaptor may be provided to match the pin configuration of the AC wall outlets in your area.

2) Plug the thin DC power cord into the DC Power Jack on the back of the piano.

3) Turn the power on

Press the power switch located on the right of the front panel to turn the power on. The display located in the center of the front panel should light and after a short time display "Standard Grand".

CAUTION

Even when the instrument is turned off, AC power is still flowing to the adapter at a minimum level. When you are not using the instrument for a long time or during electrical storms, unplug the AC power cord from the wall outlet.

3. Setting the Volume

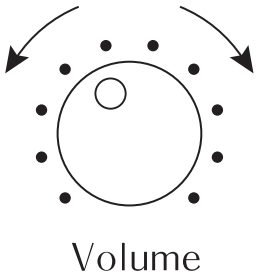

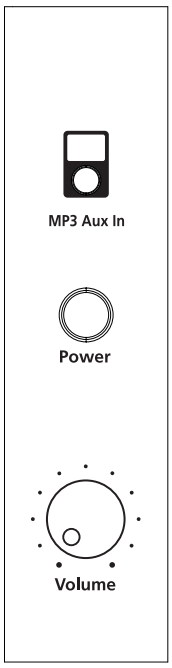

To adjust the volume, use the [Volume] knob located at the right of front panel. Play the keyboard while you adjust the knob to a comfortable and realistic volume.

NOTE

Adjusting the [Volume] knob also affects the output level of the Phones jacks and the output level of the Audio Out jacks.

Chapter 4 Selecting Sounds

1. Selecting Sounds

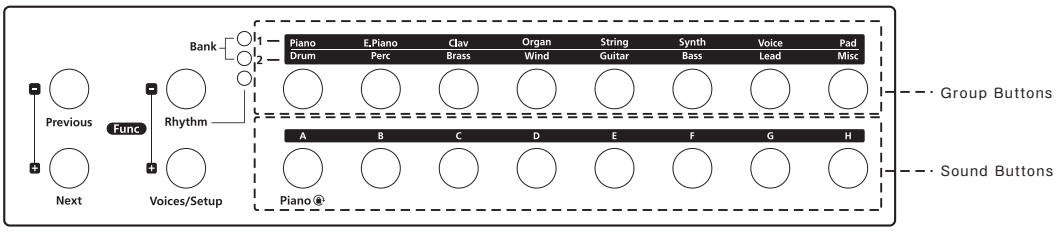

In addition to the wonderfully realistic piano sounds, you can select and play other instrument sounds, such as organ or string instruments.

To select sounds, one of the two Bank LEDs should be lit, the Rhythm LED should NOT be lit, and the [Voices/Setup] button should not be lit. Press the [Voice/Setup] button if necessary to achieve this condition.

Each bank is divided into eight Groups. Pressing a Group button immediately beneath each Group label will select that Group within the current bank. The LED of the currently selected Group's button will be lit. Pressing the same Group button again, will select another bank.

Each of the Sound select buttons corresponds to one Sound in the currently selected Group, Pressing one of the these buttons(A~H) will select that Sound. The LED of the currently selected sound's button will be lit. (Refer to voice list on page 31)

The [Previous] and [Next] buttons step through the sounds in a group. Press both at the same time to jump to the next group.

The LCD will display the currently selected sound number and name.

2. Piano Lock

To stop disruption from curious little fingers, you may "lock in" the Standard Grand sound.

1) Locking the Piano sound

Press and hold down the [Piano] button for about 2 seconds. After that, all button functions will be disabled and the Standard Grand sound is locked in.

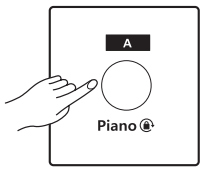

2) Unlocking the Piano sound

Hold down the [Piano] button about 2 seconds when in Piano Lock mode. It returns to normal mode and other sounds and functions will be available.

3. Selecting Setups

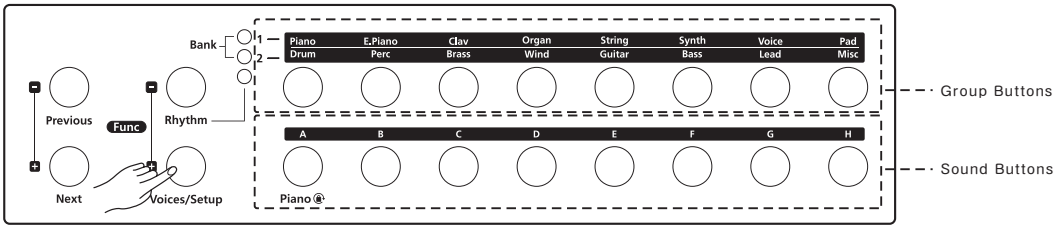

Setup mode allows you to select and play setups. Setups are configurations of up to four zones, each of which may have its own sound program and controller assignments.

Pressing the [Setup] button will take you into Setup mode. The button's LED will be illuminated green when you are in setup mode. In setup mode, you can select a setup from the 64 factory setups the same way as sound selection. (Refer to setup list on page 32)

Use the value buttons below the display to change the current setup. Press the [Previous] button to scroll down the list and press the [Next] button to scroll up the list. Pressing the [Previous] and [Next] buttons simultaneously will jump to the first setup of next group.

When you press the [Setup] buttons, the setup name and number appears on the LCD.

4. The organization of sound selection

The following figure illustrates the organization of sound selection.

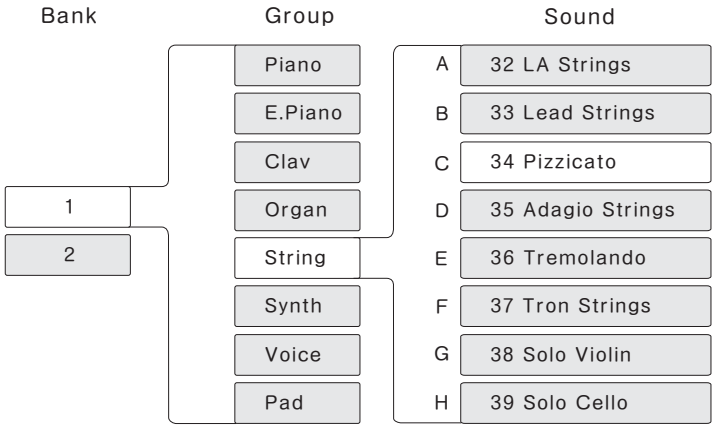

Chapter 5 Layering

1. Layering Two Sounds

This function lets you layer and play two different sounds at the same time. You can layer voices of two different voices in the same category, and create a composite voice of greater richness and texture.

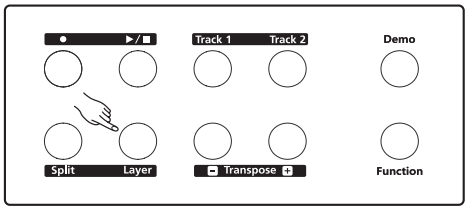

First, select a sound for the Main (Primary) sound and press the [Layer] button. A message will appear on the LCD display.

The [Layer] button LED will light and you can select the (Secondary) sound.

2. Layer Functions

1) Setting the layer volume

This parameter determines the relative volumes of the Primary and Secondary Sounds - it can be set to any number between -127 and 127. By default, the Layer Volume is set to 0, which results in both sounds having the same volume. When set to a positive number, the volume for the Secondary Sound is increased while the volume for the Primary Sound is decreased - doing the opposite has the opposite effect on the relative volumes of the layers.

In Layer mode, press the Transpose [-] or [+] button to reach the Layer Vol display. Then press the [Previous] or [Next] buttons to adjust the Layer Volume.

Default volume : 0
Volume range : -127 ~ 0 ~ +127

2) Layer Transposition

This parameter determines the transposition of the Secondary Sound relative to that of the Primary Sound - it can be set to -24, -12, 0, 12, and 24. By default, Layer Transposition is set to 0. Note that if the Primary Sound is transposed, then the Secondary Sound will be transposed by the same amount in addition to being transposed by the amount set for the Layer Transposition.

In Layer mode, press the Transpose [-] or [+] button to reach the LyrTranspose display. Then press the [Previous] or [Next] buttons to adjust the Layer Transpose.

Chapter 6 Splitting

1. Splitting the Keyboard

Split mode enables you to play two different voices on the keyboard - one with the left hand another with the right hand. For example, you can play a bass part using the Bass voice with the left hand and a melody voice with the right hand.

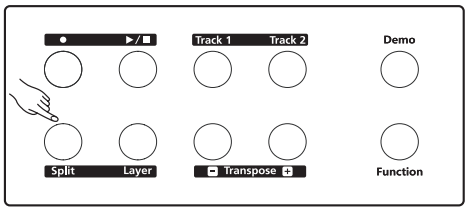

First, select a main (Primary, right hand side) sound and press the [Split] button. A message will appear on the LCD display.

The [Split] button will light and you can select the secondary, left hand sound. To return to Primary Sound selection, press the [Split] button again.

2. Split Functions

1) Setting the Split Volume

This parameter determines the relative volumes of the Secondary and Primary Sounds - it can be set to any number between -127 and 127. By default, the Split Volume is set to 0, which results in both sounds having the same volume. When set to a positive number, the volume for the Secondary Sound is increased while the volume for the Primary Sound is decreased - doing the opposite has the opposite effect on the relative volumes of the sounds.

In Split mode, press the Transpose [-] or [+] button to reach the Split Vol display. Then press the [Previous] or [Next] buttons to adjust the relative volume.

Default volume : 0
Volume range : -127 ~ 0 ~ +127

2) Specify the Split Point

Press the Transpose [-] or [+] button to reach the Split Point display. Then press the [Previous] or [Next] buttons to move the Split Point left or right.

In addition to using the value buttons, you can directly select the Split Point by striking the desired split point key on the keyboard.

3) Split Transposition

This parameter determines the transposition of the Secondary Voice relative to that of the Primary Voice - it can be set to -24, -12, 0, 12 and 24. By default, Split Transposition is set to 0. Select and adjust Split Transposition as above.

Chapter 7 Rhythm

This instrument features a variety of rhythmic backing patterns (called "rhythms") in a variety of different musical genres including pop, jazz and many others.

1. Selecting a Rhythm

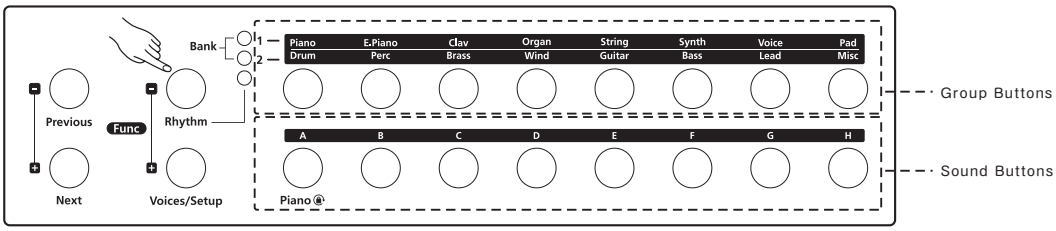

Pressing the [Rhythm] button performs the Rhythm function. The Rhythm LED will lit, indicating that the instrument is in Rhythm mode.

You can select one of the 60 rhythm patterns with the Group and Sound buttons. The Rhythm numbers 61~64 are reserved for recording songs. (Refer to the rhythm list on page 32)

The [Previous], [Next] buttons can also change a rhythm in rhythm selection mode, Press the [Previous],[Next] buttons simultaneously, to jump (+10) to the next rhythm.

Pressing the [Rhythm] button again will return to the previous mode.

The display will show the name and number of the selected rhythm as below.

2. Rhythm Functions

1) Start and Stop Rhythm

Press the [Start/Stop] ▶/■ button to start playback and press the button again to stop playback of a rhythm. The instrument must be not in demo mode.

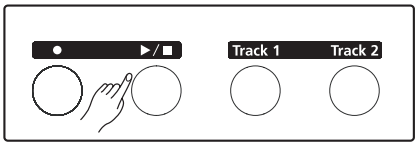

2) Rhythm Volume

You can adjust the rhythm volume in "Function" mode. (Refer to Function mode on page 19)

Default volume : 115
Volume range : 0 ~ 127

3) Rhythm Tempo

You can adjust the rhythm tempo in "Function" mode. (Refer to Function mode on page 19)

Default tempo : 120
Tempo range : 20 ~ 300

Chapter 8 Functions

1. Function Mode

1) Rhythm Tempo
2) Rhythm Volume
3) Metronome
4) Demo Repeat
5) Tune
6) Touch Sensitivity
7) FxReverb
8) Channel Enable
9) Destination
10) Bank Select
11) Program Change
12) System Exclusive ID
13) Hard Reset
14) Version Information

2. Selecting a Function

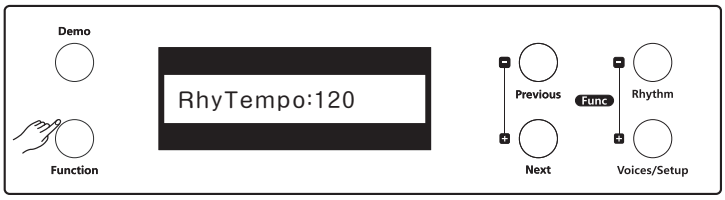

Press the [Function] button to enter Function mode. When you enter function mode, the last selected parameter since power-up will be the currently selected parameter.

Pressing the [Func -] and [Func +] buttons will scroll through the parameter list of function mode.

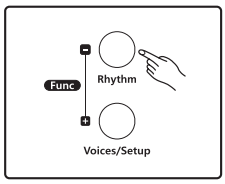

Use the [Next (+)] and [Previous (-)] bottons to scroll through the parameter values on the display.

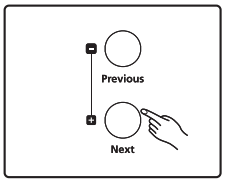

Pressing both the [Next (+)] and [Previous (-)] buttons simultaneously will jump to the first or default value in the list.

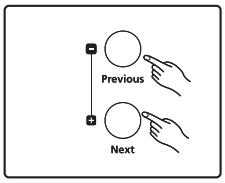

1) Rhythm Tempo

1) Press the [Function] button.
2) Press the [Func -] or [Func +] buttons to step through the parameter list.
3) You can change the parameter value when "RhyTempo:xxx" is on the LCD.
4) Pressing the [Next] or [Previous] button will select a new 'Rhythm Tempo' value.
5) Pressing both value buttons simultaneously will set this parameter to 120.

Default value : 120
Rhythm Tempo range : 20 ~ 300

RhyTempo:120

2) Rhythm Volume

1) Press the [Function] button.
2) Press the [Func -] or [Func +] buttons to step through the parameter list.
3) You can change the parameter value when "RhyVolume:xxx" is on the LCD.
4) Pressing the [Next] or [Previous] button will select a new 'Rhythm Volume' value.
5) Pressing both value buttons simultaneously will set this parameter to 115.

Default value : 115
Rhythm Volume range : 0 ~ 127

RhyVolume:115

3) Metronome

There are three setting for the internal metronome.

1) Press the [Function] button.
2) Press the [Func -] or [Func +] buttons to step through the parameter list.
3) You can change the parameter value when "Metro:xxx" is on the LCD.
4) Pressing the [Next] or [Previous] button will select a new 'Metronome' value.
5) Pressing both value buttons simultaneously will set this parameter to 'Off'.

Default value : Off
Metronome setting : Off, Rec, On
- Off : Turn off the metronome.
- Rec : Plays only when your are recording.
- On : Plays when you are performing or recording.

Metronome:Off

4) Demo Repeat

1) Press the [Function] button.
2) To select the 'Demo Repeat' parameter, use the Func [+] or Func [-] button.
3) You can change the parameter value when "Demo Repeat:xxx" is on the LCD.
4) Pressing the [Next] or [Previous] button will select a new 'Demo Repeat' value.
5) The default setting 'All' can be recalled by pressing both value buttons simultaneously.

Default value : All
Demo repeat
1. Off : Demo songs only play once.
2. One : Repeat playing of one song.
3. All : Repeat playing of all songs.

DemoRepeat:All

5) Tuning

You can fine-tune the pitch of the entire instrument. This function is useful when you play the digital piano along with another instrument or CD music. The tuning parameter allows you to fine-tune the unit in cents - one cent is one hundredth of a semitone.

1) Press the [Function] button.
2) Press the [Func -] or [Func +] buttons to step through the parameter list.
3) You can change the parameter value when "Tune:xxcent" is on the LCD.
4) Pressing the [Next] or [Previous] button will select a new 'Tuning' value.
5) Pressing both value buttons simultaneously will set this parameter to 0 (440Hz).

Default value : 0 cents
Tuning range : -100 ~ +100 cents

Tune:0cent

6) Touch

1) Press the [Function] button.
2) Press the [Func -] or [Func +] buttons to step through the parameter list.
3) You can change the parameter value when "Touch:xxxxx" is on the LCD.
4) Pressing the [Next] or [Previous] button will select a new 'Touch' value.
5) Pressing both value buttons simultaneously will set this parameter to 'Linear'.

The Touch Map parameter determines the way this instrument generates MIDI velocity information. Different maps generate different MIDI velocity values for the same physical key strike. The default map (Linear) provides the widest range of expression, but you may want to choose different map if the default does not suit your playing style. You can select from any of the following settings:

A) Linear

The MIDI output velocity is directly proportional to the strike velocity. The highest possible MIDI velocity will be output from the fastest velocity that the physical keys can detect, and the lowest possible MIDI velocity will be output from the slowest velocity that the physical keys can detect. All other MIDI and strike velocities are evenly spaced between these two extremes in the Linear map, allowing for an even distribution of strike and MIDI velocities.

B) Light1/Light2/Light3

The MIDI output velocity is higher than with the Linear Map. From Light1 to Light3, it is easier to produce high MIDI velocity values for the same key strike velocity. These maps are best suited for ensemble playing.

C) Hard1/Hard2/Hard3

The MIDI output velocity is lower than with the Linear velocity map. From Hard1 to Hard3, it is harder to produce high MIDI velocity values for the same key strike velocity.

D) Piano Touch

The MIDI output velocity is similar to the strike velocity response of an acoustic piano, and is best suited for playing acoustic piano sounds.

E) Easy Touch

This velocity map is similar to the Linear maps and make high MIDI velocities easier to produce. But, it allows more sensitive control over producing high MIDI velocities by not boosting the MIDI velocity for fast strike velocities as much as it does for medium strike velocities.

F) GM Receive

This velocity map mimics the velocity map commonly used by keyboards that use the general MIDI (GM) sound set. The GM Receive map makes medium strike velocities produce higher MIDI velocities compared to the Linear map. GM Receive affects notes from the keyboard as well as those from the MIDI in port.

7) FxReverb

1) Press the [Function] button.
2) Press the [Func -] or [Func +] buttons to step through the parameter list.
3) You can change the parameter value when "FxReverb:xx" is on the LCD.
4) Pressing the [Next] or [Previous] button will select a new 'FxReverb' value.
5) Pressing both value buttons simultaneously will set this parameter to 20.

Default value : 20 %
FxReverb range : 0 ~ 100 %

8) Channel Enable

For each of the 16 MIDI channels, you can set the Channel Enable parameter to either Enable or Disable. For each channel, setting this parameter to Enable enables the channel to transmit and receive MIDI messages and setting it to Disable disables such functions.

1) Press the [Function] button.
2) Press the [Func -] or [Func +] buttons to step through the parameter list.
3) You can change the parameter value when "Chan1:Enable" is on the LCD.
4) Pressing the [Next] or [Previous] button will select a new 'Channel Enable' value.
5) Pressing both value buttons simultaneously will set this parameter to 'Enable'.

Chan1:Enable

9) Destination

The Destination parameter determines the destination of MIDI data generated by striking keys or activating controllers. This data can be sent to the piano engine, though the MIDI out ports, or both. You can set this parameter to any of three destinations.

1) Press the [Function] button.
2) Press the [Func -] or [Func +] buttons to step through the parameter list.
3) You can change the parameter value when "Dest:Local+MIDI" is on the LCD.
4) Pressing the [Next] or [Previous] button will select a new 'Destination' value.
5) Pressing both value buttons simultaneously will set this parameter to 'Local+MIDI'.

Default value : Local+MIDI
Destination : Local+MIDI, Local, MIDII
- Local : Select this to play the piano, but not send any MIDI data to MIDI out port.
- MIDI : Select this to use the piano strictly as a controller for other external modules in your MIDI chain.
- Local+MIDI : Select this to make use of piano sounds as well as use it as a MIDI controller.

Dest:Local+MIDI

10) Bank Select

The Bank mode parameter determines the controller number with which MIDI Bank change messages are transmitted. For MIDI Bank change messages, various manufacturers have chosen different MIDI controller numbers. Most have chosen 0, 32, or both.

You can set this parameter to any of the following controller IDs:
- Ctl0 : MIDI Bank change messages are sent with controller number 0.
- Ctl32 : MIDI Bank change messages are sent with controller number 32.
- Ctl0/32 : MIDI Bank change messages are sent with controller number 0 and 32.

Default value : 0/32

BankSel:0/32

11) Program Change

The Program Change parameter determines whether or not MIDI Program Change messages are sent for Setups. You can set this parameter to either On or Off.

1) Press the [Function] button.
2) Press the [Func -] or [Func +] buttons to step through the parameter list.
3) You can change the parameter value when "ProgChg:On" is on the LCD.
4) Pressing the [Next] or [Previous] button will select a new 'Program Change' value.
5) Pressing both value buttons simultaneously will set this parameter to 'On'.

ProgChg:On

12) SysEx ID

The SysEx ID parameter determines the ID number for the unit if you are using more than one device with the same MIDI manufacturer ID number. You can set this parameter to any number from 0 to 127.

Unless you have multiple MP15 pianos receiving SysEx messages from a single source, you will not need to change the SysEx ID from the default setting of 0.

If you do have multiple MP15 pianos receiving SysEx messages from a single source, make sure each MP15 has a different SysEx ID. This will allow you to direct SysEx messages to the appropriate MP15 by specifying which unit with the SysEx ID byte that's included with every SysEx.

To have the unit respond to SysEx messages regardless of the SysEx ID, set SysEx to 127.

SysexID:0

13) Hard Reset

Performing a Hard Reset will delete all user-recorded songs and will restore all parameters to default values. This action cannot be undone.

The "Hard Reset ?" dialogue allows you to restore factory defaults to the piano. Pressing the [Next] button in this dialogue will change the display to "Confirm ?". Pressing the [Next] button in the "Confirm ?" dialogue will result in a hard reset - pressing the [Previous] in the "Confirm ?" dialogue will recall the "Hard Reset ?" dialogue.

To exit the Hard Reset dialogue, simply select another parameter using the [Func +],[Func -] buttons, or enter another mode using the [Function] button.

Hard Reset ?

Confirm ?

Fast Hard Reset : While holding down the [Function] button about 2 second, it performs Hard Reset directly without the confirmation step.

14) Version Information

1) Press the [Function] button.
2) Press the [Func −] or [Func +] buttons to step through the parameter list.
3) You can find the version info when it appears "OS:1.00.441M Obj:0.00.5" on the LCD.
4) The display will scroll to show all of the information.
5) The "OS" is current OS version and "Obj" is current sound object version.

OS:1.00.441M Obj:

Chapter 9 Recording

Recorded performances are saved to in the instrument. Since you can record up to two parts separately, you could record the left and right hand parts independently, or record both parts of a duet and hear how they sound when played back. You can also re-record only one part in case your performance was not satisfactory, or even change the instrument sound.

Recording a Performance

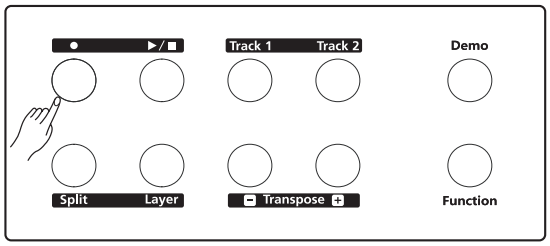

1) Press the [Record] button.
2) The "Record" and "Track" LED is blinking.

3) If you want to change the recording track, press the other track button.
4) To record a song, press the [Play/Stop] button and start playing. If the current rhythm is not NoDrumSong, a rhythm pattern will begin playing.

5) Press the [Play/Stop] button to stop recording.
6) A message will ask whether to save the recording.
7) To save it, press the [Record] button.
8) If do not want to save it, press the [Demo], [Function] or [Rhythm] button.

8) You can change the song number before saving. Press the [Next] or [Previous] value button.
9) After saving to Song 1 ~ 4, it will be assigned to rhythms 61 ~ 64. You can select the song in the rhythm list whenever you want. Press the [Play/Stop] button to start playback.

10) If you want to record with a metronome sound, the metronome function should be set to REC in the Function menu.
11) To delete recorded songs, execute "Hard Reset" in the Function menu.

Note By default, a rhythm plays while recording. If you do not want to record with a rhythm, select "NoDrumSong" as the rhythm (See page 16).

Chapter 10 Demo Songs

1. Listening to Demo Songs

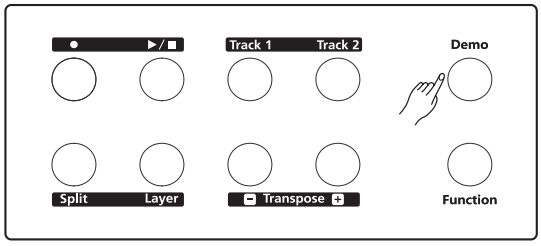

1) Press the [Demo] button to enter the demo mode.
2) To select a demo song, press the [Next (+)] or [Previous(-)] value button. (Refer to the demo song list on page 35)
3) Press the [Play/Stop] button to start playback.
4) Press the [Play/Stop] button again to stop playback.

You can set a playback mode such as Off, One and All for demo repeat.
Demo repeat (Refer to Function Mode on page 19)
1. Off : Demo songs only play once.
2. One : Repeat playing of one song.
3. All : Repeat playing of all songs.

The display will show the name and number of the demo song currently playing.

2. Transpose

You can transpose the pitch of the instrument - your keyboard performance - to match the pitch of another instrument or vocalist, without having to actually change keys on the keyboard. Transposition can be set in semitone units. For example, if you set the transposition amount to "5", playing key C produces pitch F. In this way, you can play the song as if it were in C major, and the piano will transpose it to the key of F.

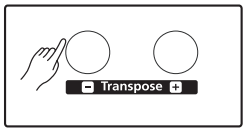

The transposition amount can be set in semitone intervals by pressing a [Transpose] button.

One of the [Transpose] buttons will light when the transposition amount is not zero : [Transpose -] if transpose downward or [Transpose +] if transpose upward.

The default setting "0" can be recalled by pressing the [Transpose -] and [Transpose +] buttons together.

Setting range : -24 ~ 0 ~ +24 Semitone

Chapter 11 Pedals

1. Pedals

This piano has three foot pedals : damper pedal (right), sostenuto pedal (center) and soft pedal (left) that produce a range of expressive effects similar to those produced by the pedals on an acoustic piano.

2. Using the Pedals

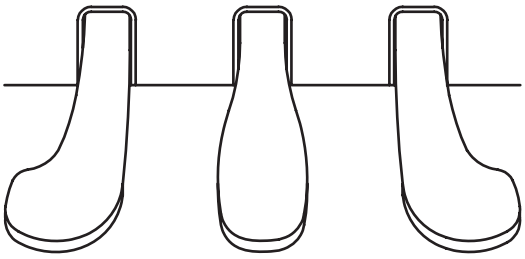

Soft Sostenuto Sustain

1) Sustain pedal

The sustain pedal functions in the same way as a damper pedal on an acoustic piano. When the damper pedal is pressed, notes sustain longer. Releasing the pedal immediately stops any sustained notes.

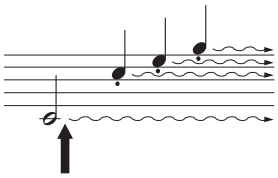

When you press the sustain pedal here, the notes you play before you release the pedal sustain loger.

2) Sostenuto pedal

If you play a note or chord on the keyboard and press the sostenuto pedal while the notes are held, those notes will sustain as long as you hold the pedal (as if the damper pedal had been pressed) but all subsequently played notes will not be sustained. This makes it possible to sustain a chord, for example, while other notes are played "staccato".

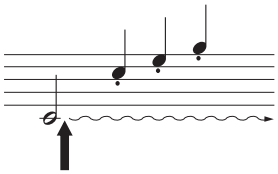

When you press the sostenuto pedal here while holding the note, the note will sustain as long as hold the pedal.

3) Soft pedal

The soft pedal reduces the volume and slightly changes the timbre of notes played while the pedal is pressed. The soft pedal will not affect notes that are already playing when it is pressed.

NOTE If the pedal doesn't work, make sure that the pedal cord is properly plugged into the main unit (See page 10).

Chapter 12 MIDI

MIDI is acronym for Musical Instrument Digital Interface, which is an industry standard protocol for electronic instruments to communicate with each other. Connecting musical instruments that support MIDI via MIDI cables enables you to transfer performance and setting data between multiple musical instruments.

NOTE

You need a dedicated MIDI cable (optional) to make a MIDI connection. You can purchase MIDI cables at musical stores.

1. MIDI Channel

A MIDI cable can transmit multiple channels of performance data which is similar to TV channels. Each channel can be assigned its own voice. Typical MIDI instruments can play up to 16 channels at the same time which is equivalent to 16 soloists.

NOTE

If you want to use your piano and record your performances with a computer, a sequencer program must be installed on your computer.

2. Connecting MIDI

To use your piano as a MIDI controller for another sound module, use a MIDI cable to connect the piano's MIDI port marked "Out" to the MIDI In port of the module that you want to control.

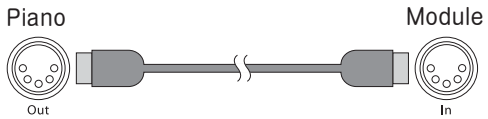

To control your piano using another MIDI controller, use a MIDI cable to connect the MIDI port marked "In" to the MIDI Out port of the controller that you will be using.

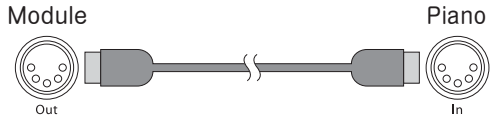

NOTE

MIDI data that can be transmitted or received varies depending on the type of MIDI device. Please check the "MIDI implementation chart" (See page 29) to find out what MIDI data and commands your MP15 can transmit or receive.

3. Connecting More Sound Modules

In order to participate in a multiple sound module chain, your piano must either be used (1) as the controller or (2) be the last module in the MIDI chain. This is because MP15 does not include a Thru MIDI port, this simply means that your piano must be at the start or at the end of the MIDI chain.

Using your piano as controller, connect the MIDI Out port to the MIDI In port of the first module, and then connect that module's MIDI Thru port to the input of the next module, and so on, until the last module is connected. The MIDI chain should end in the MIDI In port of the last module.

■ Scenario 1 : Your piano as the MIDI controller

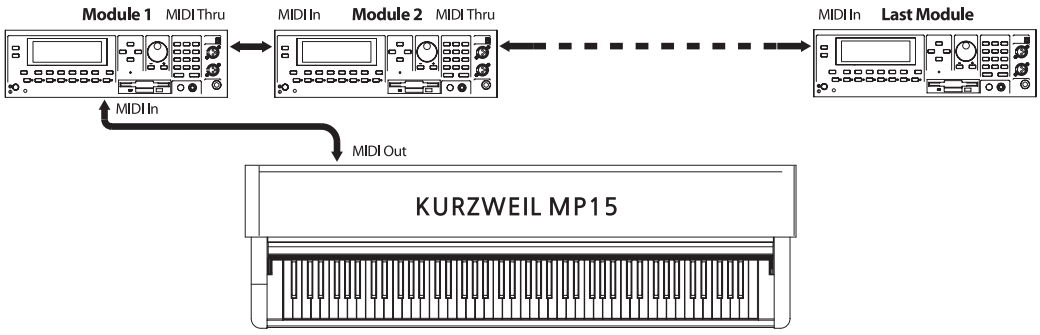

■ Scenario 2 : Your piano as the last module in the MIDI chain

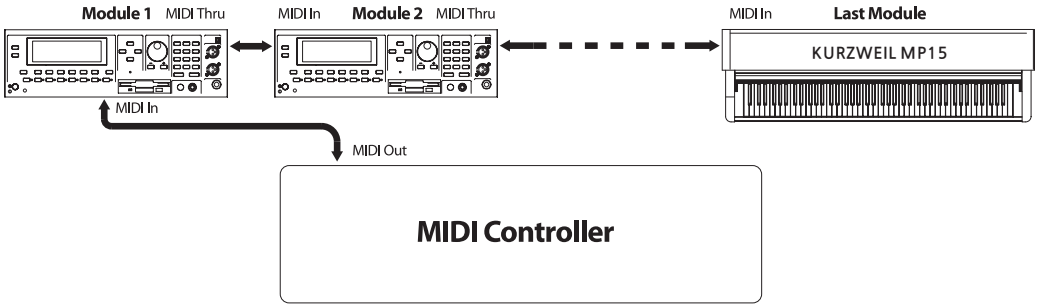

MIDI Implementation Chart

Manufacturer:
KURZWEIL

Date : 01/02/2012
Version 1.0

Function		Transmitted	Recognized	Remarks
Basic Channel	Default	1	1	Memorized
	Changed	1 - 16	1 - 16	
Mode	Default	Mode 3	Mode 3	Use Multi mode for multi-timbral applications
	Messages			
	Altered			
Note Number			0 - 127	
	True Voice	0 - 127	0 - 127	
Velocity	Note ON	O	O	
	Note OFF	X	X	
After Touch	Keys	X	X	
	Channels	X	O	
Pitch Bender		X	O	
Control Change		O 0 - 31 32 - 63 (LSB) 64 - 127	O 0 - 31 32 - 63 (LSB) 64 - 127	
Program Change		O 0 - 127	O 0 - 127	
	True #	0 - 127	0 - 127	
System Exclusive		O	O*	
System Common	Song Pos.	O	O	
	Song Sel.	O	O	
	Tune	X	X	
System Real Time	Clock	O	O	
	Messages	O	O	
Aux Messages	Local Control	X	O	
	All Notes Off	X	O	
	Active Sense	X	O	
	Reset	X	X	
Notes				

Chapter 13 Connection

1. Using Headphones

Connect a pair of headphones to one of the phones jacks. Two phones jacks are provided. You can connect two sets of standard stereo headphones. (If you are using one pair head-phones, you can plug them into either of these jacks).

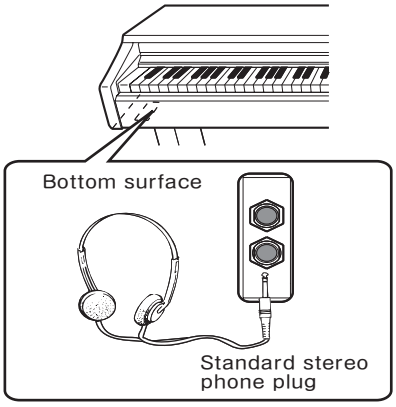

CAUTION

Do not use headphones at a high volume for an extended time. Doing so many cause hearing loss.

2. Audio In (Aux In)

You can connect the output jacks of an external device (such as CD player, tone generator) to the instrument's Aux In jacks, letting you hear the sound of that device through the built in speakers of the instrument.

3. Audio Out (Aux Out)

You can connect a stereo system to amplify the instrument's sound by using the Aux Out jacks. When the instrument's sound is output to an external device, first turn on the power to the instrument, then to the external device. Reverse this order when you turn the power off.

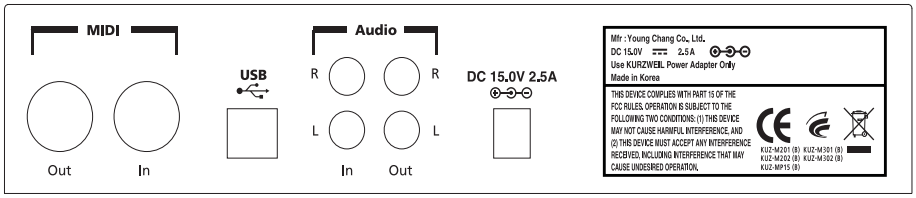

4. MP3 Aux In

You can connect the output jack of an MP3 player or smart phone to the instrument's MP3 Aux In jack on the right side of the front panel.

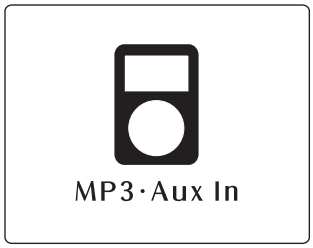

1. Sound List

ID	Group	Sound	Name
		BANK 1	
0	Piano	A	Standard Grand
1		B	Studio Grand
2		C	Horowizt Grand
3		D	Piano & Pad
4		E	Blues Piano '74
5		F	Rock Piano '74
6		G	Upright Piano
7		H	Piano & String
8	E.Piano	A	Duke's Rhds
9		B	Hotrod Rhds
10		C	Classic Wurly
11		D	Supeer Wurly
12		E	Fuzz Wurly
13		F	FM E Piano
14		G	Rich EP+Pad
15		H	UK Pop CP70
16	Clav	A	Wah Clav
17		B	Joe's Clav
18		C	BlackCow Clav
19		D	Stevie Fuzz
20		E	Orch Harp
21		F	Harpsichord
22		G	Celeste
23		H	Celeste/Glk
24	Organ	A	The Ninth Bar
25		B	Gregg's B
26		C	Ole Gospel B
27		D	Prog B3 Perc
28		E	Sly's Revenge
29		F	Farfisa
30		G	All Stops
31		H	Pipe Stops
32	String	A	LA Strings
33		B	Lead Strings
34		C	Pizzcato
35		D	Adagio Strings
36		E	Tremolando
37		F	Tron Strings
38		G	Solo Violin
39		H	Solo Cello
40	Synth	A	Classic Comp
41		B	ARP2500 Brass
42		C	Mono Trekkies
43		D	OBX Jump!
44		E	80's Synth
45		F	Synth Bell
46		G	Synth Orch
47		H	SickoSynco
48	Voice	A	Full Choir
49		B	Cathedral Vox
50		C	Aaahicious
51		D	Jazzy Ballad
52		E	Manhattan Vox
53		F	BrightSyn Vox
54		G	Tron Choir
55		H	Ahh Chorus
56	Pad	A	Slo QuadraPad
57		B	BladerunnrARP
58		C	Slo Syn Orch
59		D	SynOrcWhale
60		E	So Lush Pad
61		F	Add A Pad 1
62		G	Add a Pad 2
63		H	Heaven&Earth

ID	Group	Sound	Name
		BANK 2	
64	Drum	A	Solid Kit
65		B	Latin Kit
66		C	Electric Kit
67		D	Brush Kit
68		E	Percussion
69		F	'60sRock&Soul
70		G	RocAFella Kit
71		H	MP Brush Kit
72	Perc	A	Natural Perc
73		B	Modern Perc
74		C	Timp&Orch Perc
75		D	Marimba
76		E	Vibes
77		F	Glockenspiel
78		G	Steel Drums
79		H	Xylophone
80	Brass	A	PowerPopHorns
81		B	Salsa Section
82		C	1-NotePwrRiff
83		D	P*Funk Horns
84		E	Solo Trumpet
85		F	Mute Trumpet
86		G	Brass Fanfare
87		H	Gothic Climax
88	Wind	A	Solo Flute
89		B	Lead Oboe
90		C	Solo Clarinet
91		D	Solo Bassoon
92		E	English Horn
93		F	Bari/TenorSec
94		G	Piccolo
95		H	Tron Flutes
96	Guitar	A	Ac Guitar
97		B	Real Nylon
98		C	Fluid Guitar
99		D	Comp'd Phaser
100		E	Emo Verser
101		F	Vox'd Elec12
102		G	Rock Lead MW
103		H	Rockin' Lead
104	Bass	A	E-Bass
105		B	Flea/Bootsy
106		C	Jaco Frtless
107		D	Upright Bass
108		E	Octave Frtls
109		F	BowhSaw Bass
110		G	KneeDeepMini
111		H	Big Dummy
112	Lead	A	Saw+Mogue 4P
113		B	Emerson Lead
114		C	Micromogue +
115		D	V Sync lead
116		E	Toot Lead
117		F	MWheel Lead
118		G	12SAWLeadMW
119		H	Square Lead
120	Misc	A	BrazilAccord
121		B	MellowAccord
122		C	WindsHornStr
123		D	Strs&Silver
124		E	China Flower
125		F	Blues Harp
126		G	Touch Koto
127		H	Magic Mbira

Chapter 15 Setup & Rhythm List

1. Setup List

ID	Group	Sound	Name
0	A	A	BrightPno/Slap
1		B	BrightPno/Jaco
2		C	JazzPno/UpBass
3		D	PadPno/Levin
4		E	PnoStrng/Upbass
5		F	Phodes/E Bass
6		G	S Tramp/E Bass
7		H	FM EP/E Bass
8	B	A	CP70/Levin
9		B	Clav/Slap
10		C	PhzClav/EBass
11		D	GregKB/EBass
12		E	ProgKB/UpBass
13		F	SlyKB/SlpBass
14		G	Church1/Strings
15		H	Church2/Strings
16	C	A	Horns/SynBass
17		B	Horns/SlapBass
18		C	Orc/SynBass1
19		D	Orc/SynBass2
20		E	LushPad/Bass
21		F	Strings/EBass
22		G	Voices1/SynBs
23		H	Voices2/SynBs
24	D	A	Voices3/UpBs
25		B	Voices3/EBass
26		C	Voices4/SynBs
27		D	A Guit1/EBass
28		E	Fluid/Upright
29		F	E Guit3/EBass
30		G	Q Pad/Levin
31		H	Heaven/SynBs

ID	Group	Sound	Name
32	E	A	Comper2/SynBs
33		B	Vibes/Up Bass
34		C	Mbira/GlkHarp
35		D	Steel/Marimba
36		E	CagePerc/Glck
37		F	Mbira/NatPerc
38		G	Magic/CagePerc
39		H	Silver/GlockHarp
40	F	A	WindsStr/Mini
41		B	Luscious EP
42		C	Luscious EP2
43		D	Swank CP70
44		E	Sndtrack Xylo
45		F	Rich Stack
46		G	Harp/Marimba
47		H	Pizz Marimba
48	G	A	Big Dance Syn
49		B	Sparkle Harp
50		C	Plucked Ivory
51		D	Intense SynLd
52		E	Intense Comp
53		F	Rich Voices
54		G	VIP Accordian
55		H	Fantasy Koto
56	H	A	VIP Square Ld
57		B	VIP Mooger Ld
58		C	VIP Sync Lead
59		D	VIP KE Lead
60		E	VIP ED Lead
61		F	VIP GH Lead
62		G	Clear Setup
63		H	Default Setup

2. Rhythm List

ID	Name
1	Ballad 1
2	Ballad 2
3	Ballad 3
4	Ballad 4
5	Ballad 5
6	Ballad 6
7	Ballad 7
8	Country 1
9	Country 2
10	Country 3
11	Country 4
12	Country 5
13	Country 6
14	Jazz 1
15	Jazz 2
16	Jazz 3
17	Jazz 4
18	Jazz 5
19	Jazz 6
20	Jazz 7
21	Latin 1
22	Latin 2
23	Latin 3
24	Latin 4
25	Latin 5
26	Latin 6
27	Pop 1
28	Pop 2
29	Pop 3
30	Pop 4

ID	Name
31	Pop 5
32	Pop 6
33	Pop 7
34	R&B / Dance1
35	R&B / Dance2
36	R&B / Dance3
37	R&B / Dance4
38	R&B / Dance5
39	R&B / Dance6
40	Rock 1
41	Rock 2
42	Rock 3
43	Rock 4
44	Rock 5
45	Rock 6
46	Rock 7
47	World 1
48	World 2
49	World 3
50	World 4
51	World 5
52	Polka
53	Chacha
54	Salsa
55	Rhumba
56	Samba
57	Metro MP 1/8n
58	Metro MP 3/4
59	Metro MP 6/8
60	NoDrumSong

Demo Song List

1		Prelude I BWV 846	J.S.Bach
2		Invention No.4	J.S.Bach
3		Invention No.8	J.S.Bach
4	BMV 847	Prelude II BWV 847	J.S.Bach
5		ARIA Go I denberg-Variationen BWV 988	J.S.Bach
6	BMV 848	Fuga II (A3 VOCI)	J.S.Bach
7	Op36, No4	Sonatine Op.36 No.4	M.Clementi
8	K15v	Klavierstu ck K.15v	W.A. Mozart
9	K333	Piano Sonate K.333 1st mov.	W.A. Mozart
10	K485	Rondo in D-dur K.485	W.A. Mozart
11		Piano Sonate K.331 Rondo Turkish March	W.A. Mozart
12	K545	Piano Sonate K.545 1st mov.	W.A. Mozart
13		Minuett in G	L.v. Beethoven
14		Bagatelle No.25 Fur Elise	L.v. Beethoven
15	Op55,No. 1	Sonatine Op.55 No.1	Fr.Kuhlau
16		March Militaire Op.51 No.1	F.P.Schubert
17	Op94 - 3	Moments Musicaux 3.	F.P.Schubert
18	Op90 - 2	Impromptu Op.90 N0.2	F.P.Schubert
19	Op90 - 4	Impromptu Op.90 N0.4	F.P.Schubert
20		La chevaleresque	J.F.Buramu ler
21	Op38.No.2	Without word song Op.38 N0.2	J.L.F.Mendelssohn
22	Op30.No.6	Venetianisches Zgondellied	J.L.F.Mendelssohn
23	KK Ivb-10	Sostenuto	F.F.Chopin
24	KK Ivb-11	Valse KK IVB-11	F.F.Chopin
25	Op.7.No.1	5 Mazurkas I Op.7 N0.1	F.F.Chopin
26	Op.69-2	Valse Op.69 No.2	F.F.Chopin
27	Op18	Grande Valse Brillante Op.18	F.F.Chopin
28		Valse Op.64. No.2	F.F.Chopin
29	Op9. No.2	Noctutne Op.9 N0.2	F.F.Chopin
30	Op64 No.1	Valse Op.64 No.1	F.F.Chopin
31	Op28.No.15	Preludes in Db Maior Op.28 No.15	F.F.Chopin
32	Op66	Fantaisie-Impromptu Op.66	F.F.Chopin
33	Op15-7	Tra umerei	R. Schumann
34		Fro licher Landmann Op.68-10	R. Schumann
35	Op15	Von fremden La ndern und Menschen Op.1	R. Schumann
36		Liebestra ume Nr.3	F. Liszt
37		Dolly s Dreaming And Awakening	T. Oesten
38	Op410	Fry hlingsstimmen Op.410	J. Strauss
39		The Swan	Saint-Saens
40		Blumenlied	G. Lange
41		Valsette	F. Borowski
42	Op39,No.16	Old French Air	P.I.Tchaikovsky
43	Op39,No.10	Mazurka	P.I.Tchaikovsky
44		Polka	P.I.Tchaikovsky
45		Barcarolle	P.I.Tchaikovsky
46	Op101-7	Humoreska	A. Dvor A k
47	Op46-3	Suite Peer Gynt Op.46-3 Anitras Tanz	E. Grieg
48	L75	Suite Bergamasque Prelude	C.A.Debussy
49		Re verie	C.A.Debussy
50		Arabesque	C.A.Debussy

Chapter 17 Specifications

Keyboard	88 note fully weighted hammer action (A0 ~ C8)
Finish	Rosewood
Cabinet	MDF and Metal
Tone Gen.	Kurzweil V.A.S.T
Polyphony	64 Voices
Voices	128 Programs + 64 Setups
Rhythm	60 Patterns
Play Mode	Layer, Split
Touch	10 Sensitivity levels
Demo Songs	50 Piano Masterpieces
Sequencer	2 Tracks, 4 Songs
Pedals	3 (Sustain, Soft, Sostenuto)
Display	16 x 1 Character LCD, Blue Colored Backlight
Others	Volume, Tune, Transpose, Metronome
Connectors	MP3 Aux In, Audio In/Out, MIDI In/Out, USB Slave
Audio Power	15 W x 2, 8 Ohms
Speakers	6.5" x 2 Woofer, 2" x 2 Tweeter
Dimensions	1380 x 499x 866 (W x D X H)

KURZWEIL

www.ycpiano.co.kr

KURZWEIL

HDC YOUNG CHANG MUSIC

Young Chang North America Kurzweil Home Products
19060 S Dominguez Hills Dr, Rancho Dominguez, CA 90220
Tel : (310) 637-2000
Fax : (310) 637-2025

Kurzweil Co., LTD
iPark Building #102, Floor 9 Jeongja-Dong 9, Bundang-Gu
Soungnam-Shi, Gyeonggi-Do 463-859 South Korea
www.ycpiano.co.kr
www.youngchang.com
www.kurzweil.com

TECHNICAL SUPPORT
Email : support@Kurzweil.com